T 1-2 = 207.5
T 2-3 = 242.5

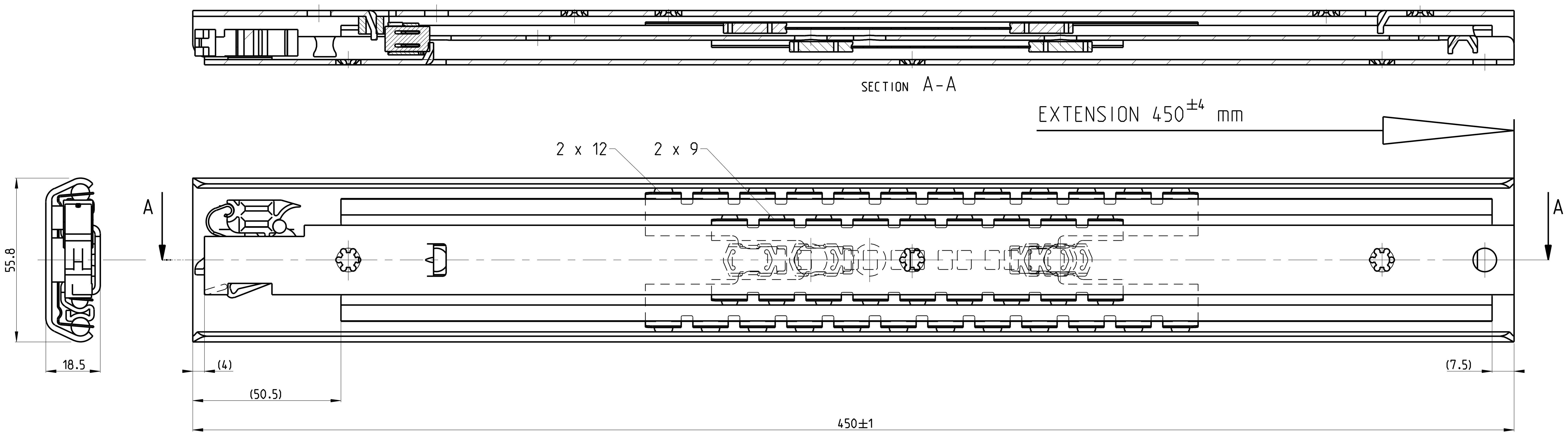

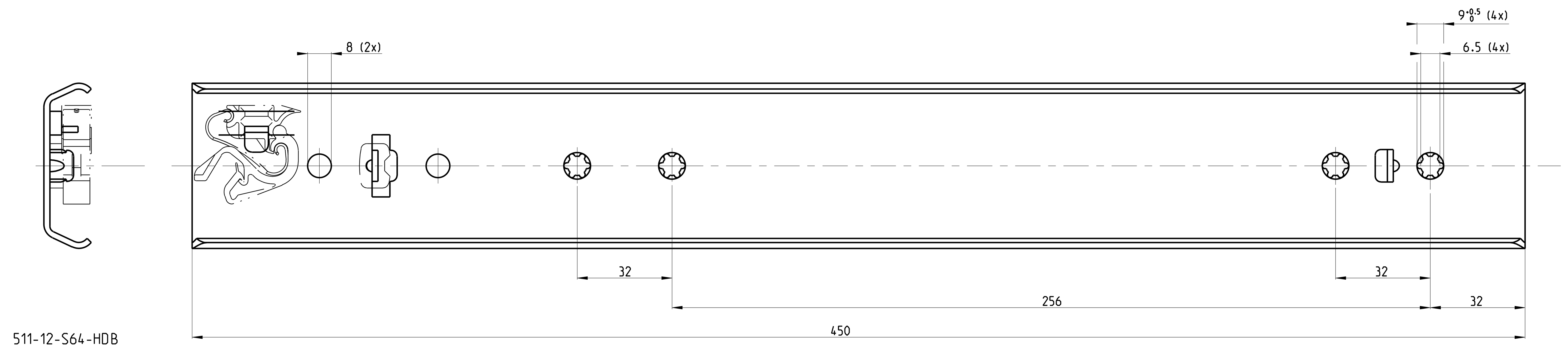

511-12-S64-HDB

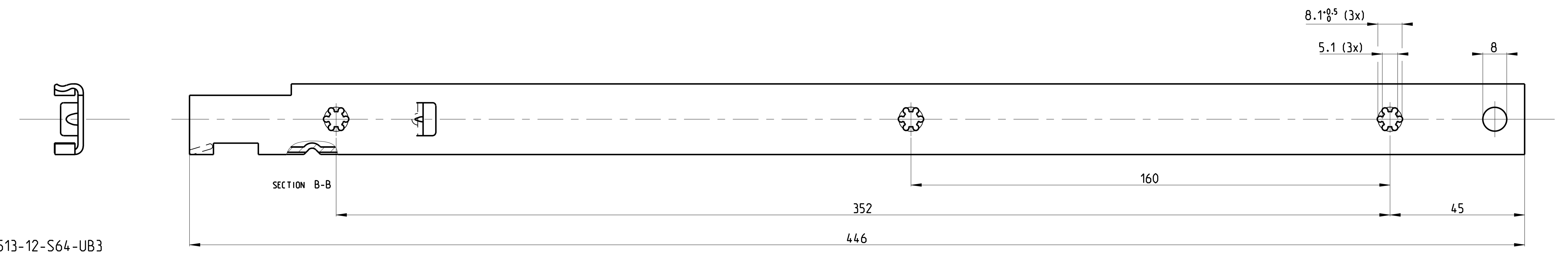

513-12-S64-UB3

FRONT

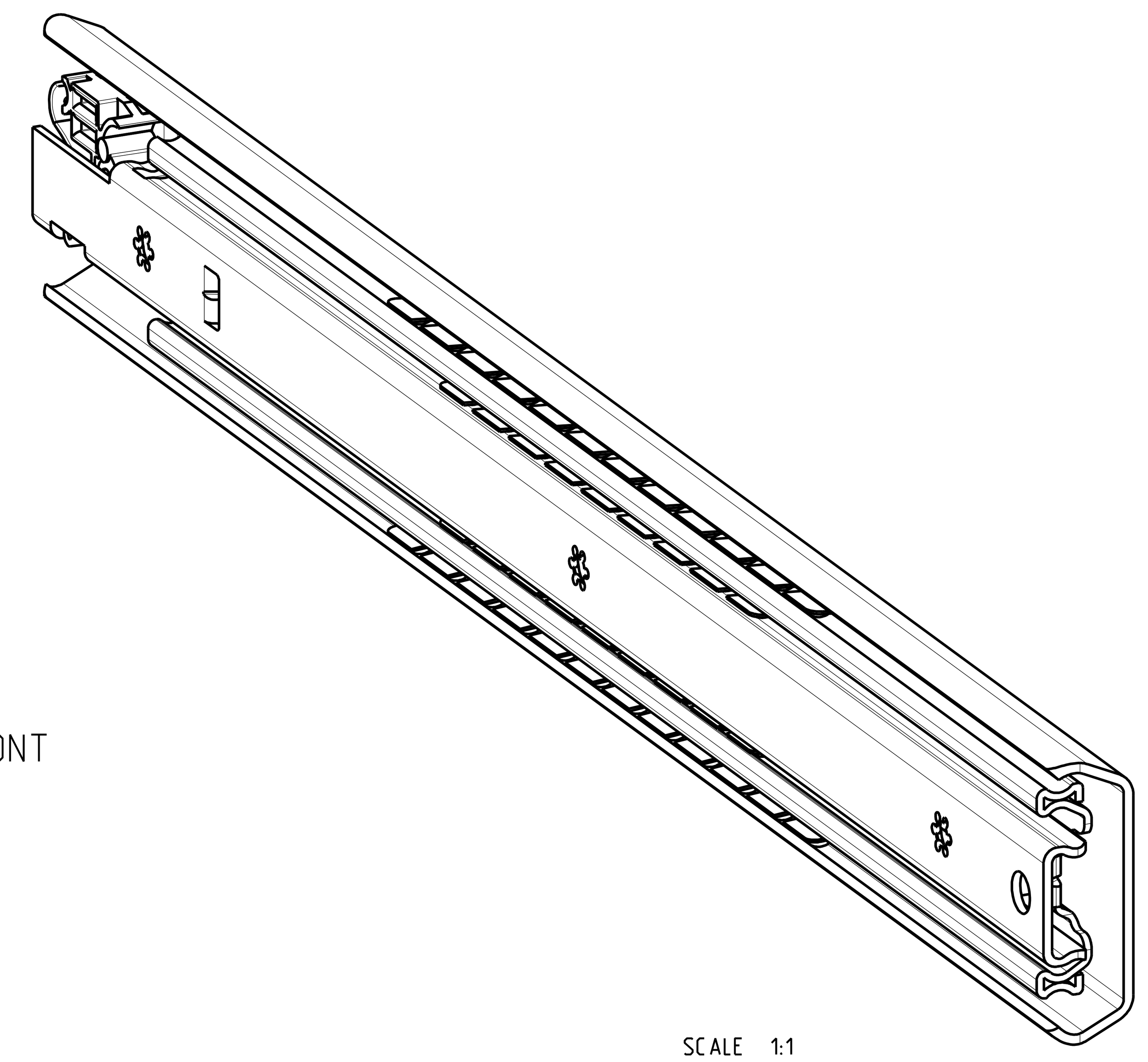

SCALE 1:1

04	-	-	-	-	05	-	-	-	-	06	-	-	-	-
01	-	-	-	-	02	-	-	-	-	03	-	-	-	-

PRO/ENGINEER Drawing
Was: - 112-F94-01

Dimensions between marks are guide dimensions.
Tolerances unless otherwise stated ±0.5mm.

Thomas Regout Int. B.V. reserves the right to alter non-customer specific specifications without notice.

American projection

DIMENSION	mm	MAT.: -
SCALE	1:1	REM.: RIGHT HAND SLIDE = LEFT HAND SLIDE
DATE	09-11-2011	-
DESIGNER	M. Mahieu	-
CHECKED	-	Type F

ULF HD 450,0 / 450,0 (18,5mm)

THOMAS REGOUT INTERNATIONAL BV

© Thomas Regout International BV All rights are reserved.

Drw. Nr. 112-S64 _ 00
Production

Format. A1