VarioSpray HP

VarioSpray HP
High Performance

The HP valve range can be used to atomize a wide variety of liquids. All parts that come into contact with liquids are made of stainless steel, thereby complying with EC 1935/2004 and FDA regulations.

Suitable for the following viscosities in mPas*

Ordering no.: 752.060.1Y.00	0	10	20	30	40	50	60	70	80	90
Ordering no.: 752.090.1Y.00	0	10	20	30	40	50	60	70	80	90

Valve	**752.060.1Y.00**	**752.090.1Y.00**
Type	2/2-way N.C.	2/2-way N.C.
Nominal diameter	0.6 mm	0.9 mm
Pressure range	10 bar	7 bar
Voltage	12 V DC	
Nominal power	9 W	
Control	Peak & Hold Control only	
Housing material	316L SS	
Spring material	301 SS	
Protection type	IP 65	
Frequency	0 – 200 Hz	
Hose connection	Push-in dia. 8 mm	
Electrical connection	M8 3-pin circular connector	

* Depending on the density of the liquid

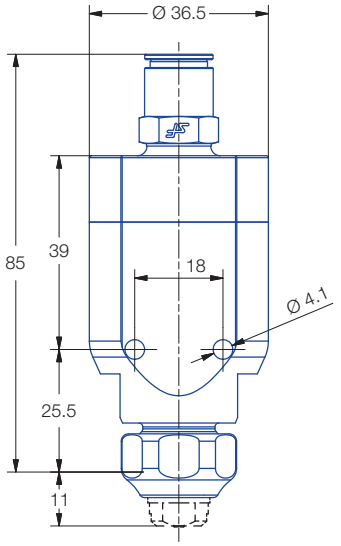

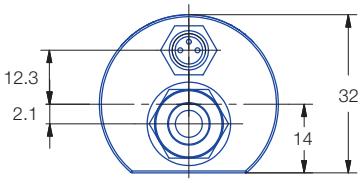

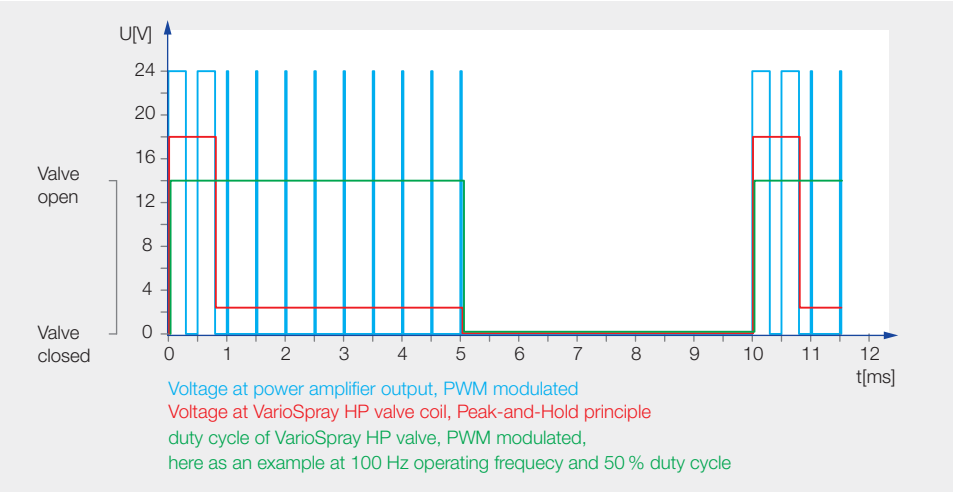

Control of the VarioSpray HP valve is based on the peak & hold principle. The required voltage signal is also generated according to the PWM* principle.
This method results in short response times and energy-efficient valve control, which also results in minimal heat generation in the magnetic coil. Typical peak-and-hold parameters, depending on the operating pressure and medium:

t_{peak}: 500-1000 µs
V_{peak}: 16-28 V
V_{hold}: 2.0-5.6 V

Spray angle**	Ordering no.	Material			Suitable for valves		Flow rate range***	
		16	17	56			l/min	l/min
		303 SS	316Ti SS/ 316L SS	POM	752.060.1Y	752.090.1Y	752.060.1Y	752.090.1Y
60°	652.304.WW.05	○	○	–	–	○	–	0.09 – 0.55
	652.334.WW.05	○	○	–	–	○	–	0.11 – 0.71
	652.364.WW.05	○	○	–	–	○	–	0.13 – 0.91
75°	652.145.WW.05	○	–	○	○	○	0.02 – 0.10	0.02 – 0.10
	652.165.WW.05	○	–	–	○	○	0.02 – 0.12	0.02 – 0.12
	652.185.WW.05	○	–	○	○	○	0.02 – 0.15	0.03 – 0.16
	652.215.WW.05	○	–	–	○	○	0.03 – 0.19	0.04 – 0.20
	652.245.WW.05	○	–	–	○	○	0.04 – 0.26	0.05 – 0.28
	652.275.WW.05	○	–	–	○	○	0.05 – 0.34	0.07 – 0.38
90°	652.216.WW.05	○	–	–	○	○	0.03 – 0.19	0.04 – 0.20
	652.246.WW.05	○	–	–	○	○	0.04 – 0.30	0.06 – 0.33
	652.276.WW.05	○	–	–	○	○	0.05 – 0.35	0.07 – 0.40
	652.306.WW.05	○	○	–	–	○	–	0.09 – 0.59
	652.336.WW.05	○	○	–	–	○	–	0.11 – 0.72
	652.366.WW.05	○	○	–	–	○	–	0.13 – 0.92
120°	652.187.WW.05	○	–	–	○	○	0.02 – 0.14	0.03 – 0.15
	652.217.WW.05	○	–	–	○	○	0.03 – 0.20	0.04 – 0.21
	652.247.WW.05	○	–	–	○	○	0.04 – 0.29	0.05 – 0.31
	652.277.WW.05	○	–	–	○	○	0.05 – 0.36	0.07 – 0.41
	652.307.WW.05	○	–	–	–	○	–	0.09 – 0.58
	652.337.WW.05	○	○	–	–	○	–	0.11 – 0.73
	652.367.WW.05	○	○	–	–	○	–	0.13 – 0.95

* PWM: Pulse width modulation
** Spray angle can differ in PWM operation
*** DC: 10 – 90 %, fluid pressure: 4 – 7 bar, frequency: 50 Hz, DC = Pulse width ratio %